University of Maryland, Baltimore County
College of Engineering and Information Technology
Department of Computer Science and Electrical Engineering

CMPE 310: Systems Design and Programming

Lab #9

Daniel Amissah

Introduction

This lab focuses on designing a continuity detector and a DC voltage measurement circuit using an Arduino. In the first task, a probe wires and an LED to determine if an electrical connection exists between two points. In the second task, we used the Arduino's ADC to measure voltage drops across a resistor and an LED and output the readings to an LCD screen.

Explanation of Circuit Operation

- **Continuity Measurement (Task 1):**
  - In this circuit, the Arduino acts as a continuity detector. When the two probe wires are connected, the circuit is closed, allowing voltage to flow. The Arduino's digital input pin detects this completed path and sends a HIGH signal to turn on the indicator LED. When a wire is disconnected, it creates an open circuit. The Arduino detects this loss of connection and keeps the LED off, indicating no continuity.
- **DC Voltage Measurement (Task 2):**
  - This circuit uses the Arduino’s Analog inputs/outputs to measure DC voltage and output the readings to an LCD display. When measuring the source voltage before the resistor, the LED reads 4.45V (slightly lower than the expected 5V due to internal wire resistance). When measuring the voltage after the resistor, the reading drops significantly to about 2.4V. This confirms that the resistor induces a voltage drop across the circuit before the current reaches the LED.

Circuit Diagrams

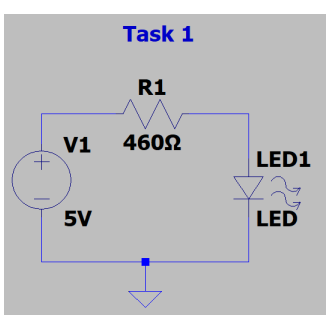

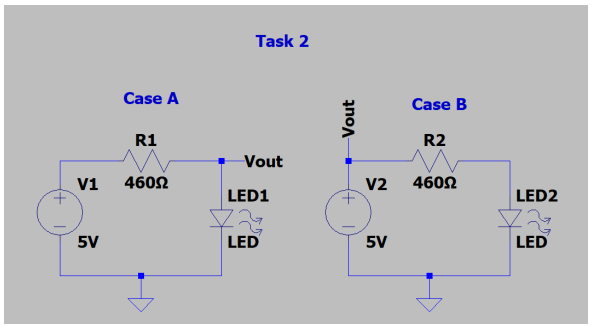

Picture of Discontinuity Circuit (Task 1) (Image 1: Continuous Circuit) (Image 2: Discontinuous Circuit) (Image 3: Arduino Pin Designation + description)

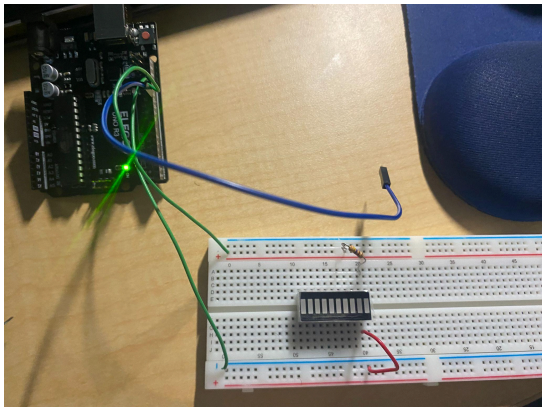

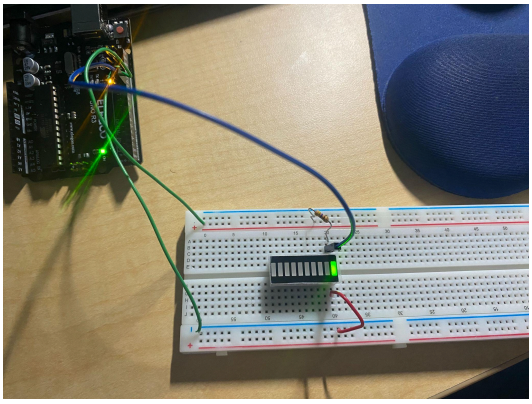

Arduino pins used:
Digital Gnd→Ground
Digital Pin 13→Vcc (5V)
Digital Pin 12→Probe

Picture of the LCD Display (Task 2) (Image 1: Voltage across LED)(Image 2: Voltage Across Resistor)(Image 3 Arduino Pin Designations + description)

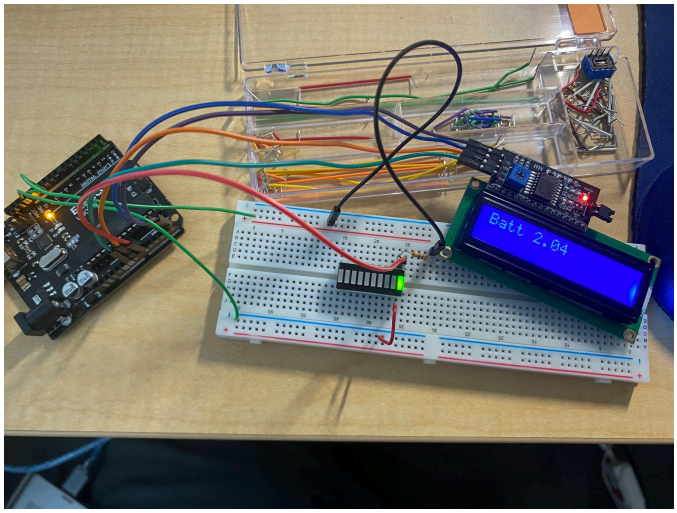

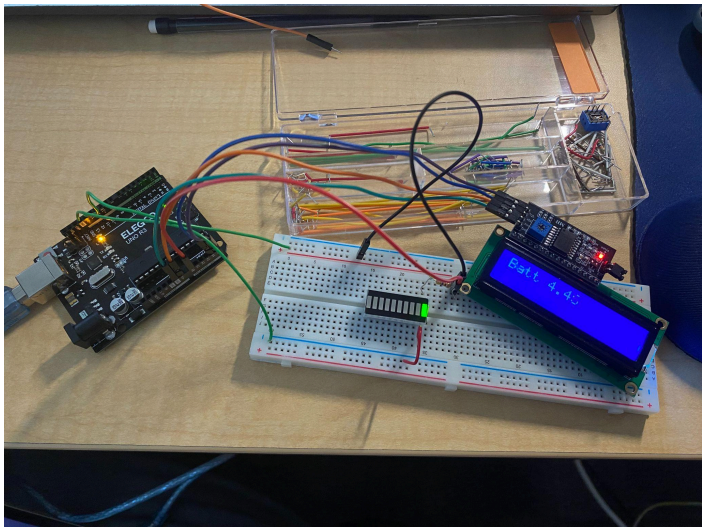

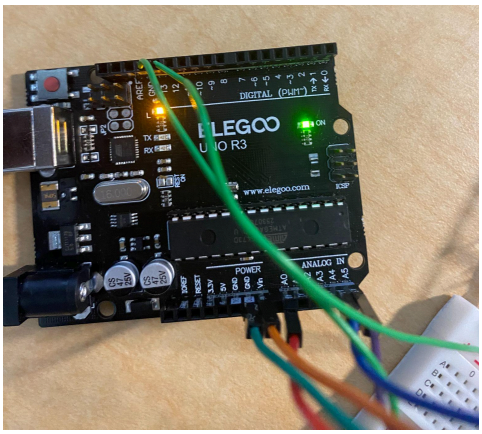

Arduino pins used:
Display Gnd→Arduino Analog Gnd
Display VCC → Arduino Analog VCC
Display SDA→Arduino Analog A4
Display SCL→Arduino Analog A5
Arduino Analog A0→probe
Arduino Digital Pin 13 (HIGH)→Power Source (5V)
Arduino Digital Gnd→Ground

Arduino Code

Task 1:

```
void setup() {
  pinMode(12, INPUT_PULLUP); //probe
  pinMode(13, OUTPUT);      //output pin
}

void loop() {
  int state = digitalRead(12);
  if (state == LOW) {             //if state low, closed circuit
    digitalWrite(13, HIGH);
  }
  else {
    digitalWrite(13, LOW);  // If state high, open circuit
  }
}
```

Task 2:

```
#include <Wire.h>
#include <LiquidCrystal_I2C.h>
LiquidCrystal_I2C lcd(0x27, 16, 2);


int voltageV = A0;  // input pin


void setup() {
lcd.init();
lcd.backlight();
pinMode (voltageV, INPUT);
pinMode(13, OUTPUT);
}


void loop() {
  digitalWrite(13, HIGH);                    //sets pin 13 as VCC
  int VoltageMsmt = analogRead(voltageV);
  float Vcalc = (4.6/1023)*VoltageMsmt;      //calculates voltage
  lcd.setCursor(0, 0);
```

```
  lcd.print("Batt ");
  lcd.print(Vcalc);                          //displays voltage calculation
}
```

Conclusion

Both parts of the lab worked as intended. The continuity circuit successfully used the Arduino to sense open and closed connections, turning the LED on only when the probe wires touched. The voltage measurement setup also worked well. By reading the analog inputs and displaying the data on the LCD, I could clearly track the voltage drop. I measured about 4.45V before the resistor, which dropped to roughly 2.4V right before the LED.